THE CONTENTS OF THIS DOCUMENT ARE PROPRIETARY AND CONFIDENTIAL.

أدنوك
ADNOC

ADNOC GROUP PROJECTS AND ENGINEERING

ASSESSMENT AND STRUCTURAL ADEQUACY CHECK OF EXISTING STRUCTURES AND PIPE RACKS

Guideline

APPROVED BY:

24/11/2021

NAME: Abdulmunim Al Kindy
TITLE: Executive Director PT&CS
EFFECTIVE DATE:

AGES-GL-01-001

ص ب 898، أبوظبي، الإمارات العربية المتحدة
PO Box 898, Abu Dhabi, UAE
adnoc.ae

شركة بترول أبوظبي الوطنية
Abu Dhabi National Oil Company

All parties consent to this document being signed electronically -PT&CS/GP/INT/2021/18407

GROUP PROJECTS & ENGINEERING / PT&CS DIRECTORATE

CUSTODIAN	Group Projects & Engineering / PT&CS
ADNOC	Specification applicable to ADNOC & ADNOC Group Companies

REVISION HISTORY

DATE	REV. NO	PREPARED BY (Designation/ Initial)	REVIEWED BY (Designation/ Initial)	ENDORSED BY (Designation / Initial)	ENDORSED BY (Designation / Initial)
28 Oct 2021	1	Manur Ajith Shenoy / SE-Structural Digitally signed by MANUR AJITH SHENOY DN: cn=MANUR AJITH SHENOY, c=ADNOC, ou=ADNOC GAS PROCESSING, email=mshenoy@adnoc.ae, c=AE Date: 2021.11.01 10:55:01 +04'00'	Kuriakose Molelputhenpura / SE-Civil Digitally signed by Kuriakose Mathew DN: cn=Kuriakose Mathew, o=AGP, ou=ADNOC, email=kmathew@adnoc.ae, c=AE Date: 2021.11.01 11:10:18 +04'00'	Najem Qambar/ VP Group Eng. – GPE Najem A. Qambar 2021.11.01 15:18:11 +04'00'	Ebraheem AlRomaithi / SVP-GPE 23/11/2021

Group Projects & Engineering is the owner of this Specification and responsible for its custody, maintenance and periodic update.

In addition, Group Projects & Engineering is responsible for communication and distribution of any changes to this Specification and its version control.

This specification will be reviewed and updated in case of any changes affecting the activities described in this specification.

INTER-RELATIONSHIPS AND STAKEHOLDERS

a. The following are inter-relationships for implementation of this Specification:

   i. ADNOC Upstream ADNOC Downstream Industry, Marketing & Trading Directorate.

   ii. ADNOC Onshore, ADNOC Offshore, ADNOC Sour Gas, ADNOC Gas Processing. ADNOC LNG, ADNOC Refining, Fertil, Borouge, Al Dhafra Petroleum, Al Yasat

b. The following are stakeholders for the purpose of this Specification:

   i. ADNOC PT&CS Directorate

c. This Specification has been approved by the ADNOC PT&CS is to be implemented by each ADNOC Group company included above subject to and in accordance with their Delegation of Authority and other governance-related processes in order to ensure compliance.

d. Each ADNOC Group company must establish/nominate a Technical Authority responsible for compliance with this Specification.

DEFINITIONS

"ADNOC" means Abu Dhabi National Oil Company.

"ADNOC Group" means ADNOC together with each company in which ADNOC, directly or indirectly, controls fifty percent (50 %) or more of the share capital.

"Approving Authority" means the decision-making body or employee with the required authority to approve Policies and Procedures or any changes to it.

"Business Line Directorates" or **"BLD"** means a directorate of ADNOC which is responsible for one or more Group Companies reporting to, or operating within the same line of business as, such directorate.

"Business Support Directorates and Functions" or **"Non-BLD"** means all the ADNOC functions and the remaining directorates, which are not ADNOC Business Line Directorates.

"CEO" means chief executive officer.

"**Group Company**" means any company within the ADNOC Group other than ADNOC.

"Guideline" means this 'Assessment and Structural Adequacy Check of Existing Structures and Pipe Racks' Guideline.

CONTROLLED INTRANET COPY

The intranet copy of this document located in the section under Group Policies on One ADNOC is the only controlled document. Copies or extracts of this document, which have been downloaded from the intranet, are uncontrolled copies and cannot be guaranteed to be the latest version.

All parties consent to this document being signed electronically -PT&CS/GP/INT/2021/18407

TABLE OF CONTENTS

1 GENERAL 7
1.1 INTRODUCTION 7
1.2 PURPOSE 7
1.3 DEFINITIONS AND ABBREVIATIONS 7
SECTION A - GENERAL 9
2 REFERENCE DOCUMENTS 9
2.1 INTERNATIONAL CODES AND STANDARDS 9
2.2 ADNOC SPECIFICATIONS 9
2.3 STANDARD DRAWINGS 10
2.4 OTHER REFERENCES 10
3 DOCUMENT PRECEDENCE 10
4 SPECIFICATION DEVIATION / CONCESSION CONTROL 10
5 DESIGN CONSIDERATIONS / MINIMUM DESIGN REQUIREMENTS 10
SECTION B – TECHNICAL REQUIREMENTS 11
6 SCOPE 11
7 RESPONSIBILITIES 11
8 ENVIRONMENTAL DATA AND SITE CONDITIONS 12
8.1 METEOROLOGICAL DATA 12
8.2 SEISMIC DATA 12
8.3 GEOTECHNICAL DATA 12
9 DATA FOR ASSESSMENT 12
9.1 GENERAL 12
9.2 LOADS 13
9.3 MATERIAL PROPERTIES 13
9.4 PROPERTIES OF THE STRUCTURE 13
10 GENERAL FRAMEWORK OF ASSESSMENT 14
10.1 OBJECTIVE STATEMENT 14
10.2 APPROACH OF ASSESSMENT 14
10.3 DATA – COLLECTION, VERIFICATION & STUDY 14
10.4 DETAILED STRUCTURAL ASSESSMENT 15
10.5 RESULTS OF ASSESSMENT 16

All parties consent to this document being signed electronically -PT&CS/GP/INT/2021/18407

11 COMPUTER PROGRAMS 19
12 SPECIFIC METHODOLOGY FOR THE ADEQUACY CHECK OF EXISTING PIPE RACKS AND PROCESS STRUCTURES 19
12.1 GENERAL 19
12.2 REQUIREMENT OF ADEQUACY CHECK 19
12.3 ADEQUACY CHECK APPROACH 20
12.4 ADEQUACY CHECK GENERAL REQUIREMENTS 22
12.5 STRUCTURAL ADEQUACY CHECK PROCEDURE 24
12.6 CONNECTIONS DESIGN CHECK 27
12.7 ANCHOR BOLTS AND BASE PLATES DESIGN CHECK 27
12.8 FOUNDATIONS DESIGN CHECK 28
12.9 RESULTS AND REPORTING 28
13 MODIFICATION AND STRENGTHENING DESIGN 29
13.1 STEEL STRUCTURE MODIFICATION 29
13.2 FOUNDATION MODIFICATION 30
13.3 CONNECTION MODIFICATION 31
13.4 TEMPORARY SUPPORT REQUIREMENT AND DESIGN 31
14 ADDITIONAL SPECIFIC REQUIREMENTS 31
SECTION C – OTHER REQUIREMENTS 32
15 QUALITY PLANS 32
15.1 GENERAL 32
15.2 INSPECTION, TESTING AND REPORTING 32
15.3 QUALITY CONTROL AND ASSURANCE 32
16 SUB-CONTRACTORS AND SUPPLIERS 33
17 MATERIAL CERTIFICATIONS 33
18 DOCUMENTATION / MANUFACTURER DATA RECORDS 33
SECTION D – STANDARD DRAWINGS & DATA SHEETS 35
19 DATASHEET TEMPLATES 35
20 STANDARD DRAWINGS 35
SECTION E - APPENDICES 36
APPENDIX A1. FLOW CHART FOR GENERAL ASSESSMENT OF EXISTING STRUCTURES 37
APPENDIX A2. PIPE RACK ADEQUACY CHECK ANALYSIS / DESIGN STAGES 38
APPENDIX A3. TYPICAL STEEL STRUCTURE MODIFICATION/ STRENGTHENING DETAILS 39
APPENDIX A4. TYPICAL FOUNDATION MODIFICATION/STRENGTHENING DETAILS 42

All parties consent to this document being signed electronically -PT&CS/GP/INT/2021/18407

LIST OF TABLES

TABLE 1 LIST OF ABBREVIATIONS 8
TABLE 2 CATEGORIZATION BASED ON AVAILABILITY OF DATA 21

All parties consent to this document being signed electronically -PT&CS/GP/INT/2021/18407

1 GENERAL

1.1 Introduction

Assessment and adequacy check of existing structures is an important task in ADNOC plants, as existing structures are being increasingly utilized as part of expansion/modification of plants in order to optimize cost. This document provides guidance on the assessment methodology and adequacy verification of existing onshore structures and pipe racks. It also presents various effective ways of modifications and strengthening of these structures and their foundations, to be implemented as intervention measures to mitigate identified inadequacies.

1.2 Purpose

The purpose of this document is to provide a general framework for the assessment of existing structures and to detail the specific requirements, design approach and procedure for performing the structural adequacy check of existing pipe racks. The recommendations for carrying out modifications and/or strengthening of the structures when required to maintain the desired level of safety and serviceability are also covered.

This document does not cover Remnant Life Assessment and Life Extension study of structures, the related requirements of which can be found in relevant COMPANY Standards. Also, the document is not applicable to coastal/offshore structures.

1.3 Definitions and Abbreviations

1.3.1 Definitions

The following defined terms are used throughout this specification:

"**[PSR]"** indicates a mandatory Process Safety Requirement

"**COMPANY**" means ADNOC, ADNOC Group or an ADNOC Group Company, and includes any agent or consultant authorized to act for, and on behalf of the COMPANY.

"**CONTRACTOR**" means the parties that carry out all or part of the design, engineering, procurement, construction, commissioning or management for ADNOC projects. CONTRACTOR includes its approved MANUFACTURER(s), SUPPLIER(s), SUB-SUPPLIER(s) and SUB-CONTRACTOR(s).

"**ENGINEER**" means the engineering division of the CONTRACTOR/SUB-CONTRACTOR which performs the design/ Structural Adequacy Check of the structure or element in question.

"**MANUFACTURER**" means the Original Equipment Manufacturer (OEM) or MANUFACTURER of one or more of the component(s) which make up a sub-assembly or item of equipment assembled by the main SUPPLIER or his nominated SUB-SUPPLIER.

"may" means a permitted option

"shall" indicates mandatory requirements

"should" means a recommendation

"**SUB-CONTRACTOR**" means any party engaged by the CONTRACTOR to undertake any assigned work on their behalf. COMPANY maintains the right to review all proposed SUB-CONTRACTORs; this right does not relieve the CONTRACTOR of their obligations under the Contract, nor does it create any contractual relationship between COMPANY and the SUB-CONTRACTOR.

All parties consent to this document being signed electronically -PT&CS/GP/INT/2021/18407

"SUPPLIER" means the party entering into a Contract with COMPANY to provide the materials, equipment, supporting technical documents and/or drawings, guarantees, warranties and/or agreed services in accordance with the requirements of the purchase order and relevant specification(s). The term SUPPLIER includes any legally appointed successors and/or nominated representatives of the SUPPLIER.

"**SUB-SUPPLIER**" means the sub-contracted SUPPLIER of equipment sub-components software and/or support services relating to the equipment / package, or part thereof, to be provided by the SUPPLIER. COMPANY maintains the right to review all proposed SUB-SUPPLIERS, but this right does not relieve the SUPPLIER of their obligations under the Contract, nor does it create any contractual relationship between COMPANY and any individual SUB-SUPPLIER.

1.3.2 Abbreviations

The abbreviations used throughout this Specification are shown in Table 1.

Table 1 List of Abbreviations

Abbreviations	
HSE	Health, Safety and Environmental
ISO	International Organisation for Standardisation
ITP	Inspection and Test Plan
PQR	Procedure Qualification Record
QC	Quality Control
QCR	Quality Control Record
SME	Subject Matter Expert
TBC	To Be Confirmed
DEFINE	The stage of the project which aims to develop the Project definition, freeze the scope and enable final investment decision on EXECUTE stage
EXECUTE	The stage of the project which aims to develop the detailed engineering design, procure materials and construct the equipment/systems to achieve a fully operating asset within the approved scope, schedule, quality & HSE

All parties consent to this document being signed electronically -PT&CS/GP/INT/2021/18407

SECTION A - GENERAL

2 REFERENCE DOCUMENTS

2.1 International Codes and Standards

The following Codes and Standards shall form a part of this specification. When an edition date is not indicated for a Code or Standard, the latest edition in force at the time of the contract award shall apply.

INTERNATIONAL ORGANIZATION FOR STANDARDIZATION (ISO)

ISO 13822	Bases for design of structures — Assessment of existing structures

EUROCODES (BS EN)

BS EN ISO 9001	Quality Management Systems – Requirements
BS EN ISO 9004	Quality management — Quality of an organization — Guidance to achieve sustained success

AMERICAN CONCRETE INSTITUE (ACI)

ACI 562	Code Requirements for Assessment, Repair, and Rehabilitation of Existing Concrete Structures

2.2 ADNOC Specifications

The following ADNOC general specifications, as available with respective Group Company and as applicable to the Project, shall form a part of this specification. When an edition date is not indicated for a document, the latest edition in force at the time of contract award shall apply.

Concrete Supply and Construction- Specification	AGES-SP-01-001
Structural Steel Supply, Fabrication & Erection- Specification	AGES-SP-01-002
Structural Design Basis- Onshore Specification	AGES-SP-01-003
Anchor Bolts and Grouting - Specification	AGES-SP-01-004
Basic Engineering Design Data- Specification	TBC
Concrete Repair- Specification	TBC
Piping Design Basis	AGES-SP-09-001
Piping Flexibility Analysis- Specification	AGES-SP-09-004
Pipe Supports- Specification	AGES-SP-09-006
Civil Maintenance Standard	TBC

All parties consent to this document being signed electronically -PT&CS/GP/INT/2021/18407

2.3 Standard Drawings

The following ADNOC standard drawings, as available with respective Group Company and as applicable to the Project, shall form a part of this specification. When an edition date is not indicated for a document, the latest edition in force at the time of contract award shall apply

Concrete and Civil Works - General Notes	TBC
Structural Steel - General Notes	TBC

2.4 Other References

Not applicable.

3 DOCUMENT PRECEDENCE

The specifications and codes referred to in this Specification shall, unless stated otherwise, be the latest approved issue at the time of contract award.

It shall be the CONTRACTOR's responsibility to be, or to become, knowledgeable of the requirements of the referenced Codes and Standards.

The CONTRACTOR shall notify the COMPANY of any apparent conflict between this specification, the related data sheets, the Codes and Standards and any other specifications noted herein.

Resolution and/or interpretation precedence shall be obtained from the COMPANY in writing before proceeding with the design/manufacture.

In case of conflict, the order of document precedence shall be:

a. UAE Statutory requirements

b. ADNOC HSE Standards

c. Equipment datasheets and drawings

d. Project Specifications and standard drawings

e. Company Specifications

f. National / International Standards

4 SPECIFICATION DEVIATION / CONCESSION CONTROL

Any technical deviations to the Purchase Order and its attachments including, but not limited to, the COMPANY's General Specifications shall be sought by the CONTRACTOR only through technical deviation request format. Technical deviation requests require COMPANY'S review/approval, prior to the proposed technical changes being implemented. Technical changes implemented prior to COMPANY approval are subject to rejection.

5 DESIGN CONSIDERATIONS / MINIMUM DESIGN REQUIREMENTS

Refer to Section B of this Specification.

All parties consent to this document being signed electronically -PT&CS/GP/INT/2021/18407

SECTION B – TECHNICAL REQUIREMENTS

6 SCOPE

a. This guideline shall be applicable for all existing onshore structures of ADNOC plants, which include mainland, natural islands and artificial islands.

b. The term “existing structures” used in a general sense in this document is intended to include pipe racks, process structures, pipe supports, buildings and shelters, along with their foundations

c. This document shall not waive the requirement of producing the necessary document for the specific methodology to be followed in the structural assessment and adequacy check related to individual project. It shall not relieve the CONTRACTOR/ ENGINEER from their responsibility / liability to ensure that the existing structure/pipe-rack design is performed to the best engineering practices and its integrity is not jeopardized by the added loads. Assessment methodology not covered by this guideline (if encountered in the project) such as for concrete buildings shall be developed by the CONTRACTOR/ ENGINEER and approved by the COMPANY.

d. This document shall be read in conjunction with COMPANY Civil Maintenance Standard, where it is required to address issues related to integrity, inspection and maintenance of pipe-racks/ structures.

e. Generally, the assessment of existing structures can be initiated under any of the following circumstances:

   i. Modification or rehabilitation of structure during which new structural members are added to the existing load carrying system.

   ii. Anticipated change in use of the facility, addition of loads, or operational changes

   iii. Intention to use the existing structures/pipe racks to support additional new pipes or equipment

   iv. Deterioration due to time dependent environmental effects e.g. corrosion, fatigue

   v. Structural damage from accidental actions e.g. earthquake, storm, etc.

   vi. Concerns on integrity of the structure as a result of exposure to newly identified hazards or change in mandate of existing design codes and regulations.

   However, the decision regarding whether a detailed adequacy check is necessary and whether the latest codes and standards (for wind/seismic) need to be applied shall be reached with COMPANY approval after considering various facts such as physical condition, structural configuration, original design considerations, nature and magnitude of new loads, previous modifications, etc. Also, the verification methodology to be followed for structural assessment shall be initially agreed with COMPANY.

7 RESPONSIBILITIES

CONTRACTOR/ ENGINEER	The CONTRACTOR / ENGINEER shall be responsible for the implementation of these guidelines in the adequacy check calculations of existing structures
COMPANY	COMPANY is responsible for the review and approval of the submission of documentation made by CONTRACTOR /

All parties consent to this document being signed electronically -PT&CS/GP/INT/2021/18407

	ENGINEER. Approval by COMPANY shall not relieve the CONTRACTOR / ENGINEER of any of his responsibilities.
PROJECTS TEAM	The PROJECTS TEAM shall ensure that the use of this document is mandated upon the CONTRACTOR / ENGINEER as part of the scope of work and that this document is included in the tender package.
PLANT MAINTENANCE	In case of any requirement for scaffolding to inspect the existing structures or excavation / backfilling to inspect the existing foundations, the same shall be arranged by PLANT MAINTENANCE for DEFINE and/or STUDY projects only. For EXECUTE Projects, the scaffolding and/or excavation and backfilling shall be arranged by the CONTRACTOR as part of scope of works.
PLANT DOCUMENTATION	Where necessary, PLANT DOCUMENTATION should provide assistance to CONTRACTOR / ENGINEER in retrieving existing data for the structures and piping in consideration.

8 ENVIRONMENTAL DATA AND SITE CONDITIONS

8.1 Meteorological Data

Meteorological data shall be in accordance with COMPANY/PROJECT Basic Engineering Design Data

8.2 Seismic Data

Refer AGES-SP-01-003, Structural Design Basis – Onshore Specification for this section. Where deemed necessary at specific location, Seismic Hazard Assessment (SHA) may be carried out with COMPANY approval to establish site specific seismic spectral acceleration parameters.

8.3 Geotechnical Data

a. Geotechnical data shall be obtained from COMPANY records based on existing geo-technical reports and/or borehole data.

b. In case existing geotechnical data is not available or not adequate, CONTRACTOR / ENGINEER shall propose the design soil parameters to be used in the adequacy check calculations and have prior agreement with COMPANY in this regard.

c. CONTRACTOR / ENGINEER may be requested to carry out specific geotechnical investigations at sites lacking such information.

9 DATA FOR ASSESSMENT

9.1 General

a. Data for assessment should be related to the material properties, structural properties, dimensions, and other conditions as actually established for the existing structure, and to previous and/or future actions to the structure.

All parties consent to this document being signed electronically -PT&CS/GP/INT/2021/18407

b. Following main principles shall be considered when assessing existing structures, unless otherwise specifically agreed and approved by COMPANY:

   i. Currently valid codes for verification of structural integrity should be applied. Codes valid in the period when the structure was originally designed should be used only for guidance.

   ii. Actual (estimated) characteristics of structural materials, loads, and geometric data concerning the structural behaviour should be considered. The original design documentation including drawings should be used as guidance documents only.

   iii. Site verification of As-Built drawings shall be required to ascertain actual configuration and condition of existing structures.

9.2 Loads

a. Loads shall be determined in accordance with AGES-SP-01-003, Structural Design Basis- Onshore Specification and current codes

b. Changes of loads caused by the change in use or modification of an existing structure shall be taken into consideration. Load values corresponding with the actual situation with a provision of future requirement shall be considered. When some loads have been reduced or removed completely, the representative values of these loads (actions) can be reduced. When overloading has been observed in the past it is appropriate to increase adequately the representative load values.

c. Change of loads due to exposure to newly identified hazards such as blast shall also be considered based on site specific HSE studies

9.3 Material Properties

a. Material properties, when the original design documentation is available and no serious deterioration, design errors or construction errors are suspected, the characteristic values given in original design may be used.

b. In all other cases, material properties shall be considered according to the actual state of the structure verified by destructive or non-destructive tests and inspections. The assessment of material properties shall consider deterioration and possible environmental influences of a physical, chemical or biological nature during the history of the structure.

c. In all cases such parameters shall be updated to consider aging effect and integrity concerns if any as per inspection and test reports.

9.4 Properties of the Structure

a. With regard to geometry of structure and dimensions of structural elements, when the original design documentation is available and no significant changes have taken place, the nominal dimensions given in the documentation may be used in the assessment.

b. However, when the original design documentation is not available or changes in structure are suspected, all such information shall be determined on the basis of adequate on-site measurements and inspection.

All parties consent to this document being signed electronically -PT&CS/GP/INT/2021/18407

10 GENERAL FRAMEWORK OF ASSESSMENT

10.1 Objective Statement

The objective of the assessment of an existing structure in terms of its required future structural performance shall be specified in consultation with COMPANY, based on the following performance levels:

a. Safety performance which provides appropriate safety for the users of the structure.

b. Serviceability performance requirements applicable to structure associated with its function.

10.2 Approach of Assessment

a. CONTRACTOR/ENGINEER shall develop a detailed assessment methodology and submit for COMPANY approval

b. The assessment of existing structures and foundations should generally be approached in a different manner than the design of new facilities.

c. Modification to existing structures is often a balance between the reduction of risk and the cost of modification. Hence to maximize the benefit and minimize the cost of an upgrade, practical design considerations should be adopted. CONTRACTOR / ENGINEER shall propose and obtain COMPANY approval on such considerations in the early stages of design.

d. Refer Appendix A1 for a typical “Flow chart for General Assessment of Existing Structures”.

10.3 Data – Collection, Verification & Study

a. CONTRACTOR / ENGINEER shall collect all required data including existing drawings, design documents and specifications related to the existing facilities through COMPANY archives, data base and necessary site visits.

b. In order to perform the adequacy check of existing structures, all existing design data required should be latest and confirmed to their “As-Built” conditions. CONTRACTOR / ENGINEER shall verify physically on site “As-Built” conditions with existing drawings and collect any missing information. Any discrepancies shall be notified to COMPANY for resolution.

c. CONTRACTOR / ENGINEER shall also collect the available inspection and test reports from the plant and review the findings for consideration in the assessment.

d. CONTRACTOR / ENGINEER, if deemed required, shall perform on-site and lab testing at appropriate stage of the Project to ascertain the material grade, any deterioration and degradation of structural and foundation components.

e. Physical condition of the structure for defects, distress, deformation or material deterioration such as cracks, corrosion of steel, excessive deflection, instability, connection failure, settlement, concrete spalling etc., shall be recorded and reported to COMPANY. The observations at site along with inspection / test report findings shall be appropriately considered in the adequacy assessment of existing structures. CONTRACTOR /ENGINEER shall propose all such considerations and obtain COMPANY approval.

f. CONTRACTOR / ENGINEER shall collect the latest available structural analysis model from COMPANY for the structure and update the same to reflect actual site condition. CONTRACTOR shall develop the analysis model in case the same is not available with COMPANY.

All parties consent to this document being signed electronically -PT&CS/GP/INT/2021/18407

g. CONTRACTOR / ENGINEER shall identify all typical connections and capture all connection details as part of data collection.

10.4 Detailed Structural Assessment

a. The structures shall be evaluated and designed for both Strength and Serviceability limit states in accordance with AGES-SP-01-003, Structural Design Basis- Onshore Specification

b. The design loads and load combinations for the assessment of existing structures and foundations shall be as per AGES-SP-01-003, Structural Design Basis- Onshore Specification, unless specifically agreed otherwise with COMPANY.

c. The detailed assessment shall cover all the structural elements including but not limited to beams, column, bracings, slabs, foundations, connections, anchor bolts, base plates, etc.

d. The structural analysis shall be carried out in the following three stages:

   i. Stage-1 As Is (original) Condition: Assessment shall consider the actual structure and loadings without considering the required additional loads and modifications. This is to ensure that there are no structural inadequacies being carried forward from past or to highlight any historical inadequacies. This assessment will also assist in optimizing any conservative loading considerations.

   ii. Stage-2 Modified Condition: Assessment shall consider the actual structure and required additional loads and modifications. This stage will determine the structural inadequacies, if any and will provide guidance in developing strengthening schemes to mitigate such inadequacies.

   iii. Stage-3 Modified and Strengthened Condition: Assessment shall consider the required strengthening measures to mitigate structural inadequacies of Stage-2 with required additional loads and modifications. This stage shall ensure that proposed structural strengthening and modifications are adequate and in full compliance with applicable codes and standards.

e. An advanced level of assessment may be carried out when deemed necessary by considering some of the following :

   i. Site specific Response Spectra for seismic loads

   ii. Advanced analysis methods starting from non-linear geometrical analysis to a more detailed Finite Element simulations accounting for both geometrical and material non-linearities, which can be extended to Time History analysis.

   This, however, may lead to increased complexities in the assessment, requiring the services of a specialized competent engineer to perform the assessment.

10.4.1 Structural analysis

10.4.1.1 Analysis Models

a. Linear structural analysis shall be carried out using STAAD Pro structural analysis software. Use of any other equivalent software is subject to COMPANY approval.

b. Analytical 3D model shall represent appropriate geometry, connections, section properties, material properties, loads and load combinations, design input parameters as per referenced code, standards and specifications.

All parties consent to this document being signed electronically -PT&CS/GP/INT/2021/18407

c. All new and existing structural analysis models shall be updated in accordance with Structural Modelling Guidelines (where such guideline exists with any group COMPANY).

10.4.1.2 Loads & Load Combinations

a. The list of applicable loads shall be in accordance with AGES-SP-01-003, Structural Design Basis-Onshore Specification, for all stages (Stage-1 to Stage- 3) of structural assessment. The basic loads specified therein shall be considered in the design unless otherwise specified in this document or specifically approved by COMPANY.

b. CONTRACTOR / ENGINEER shall highlight any conservative loading considered in the original design and propose realistic loading without compromising the safety and integrity of the structures in order to avoid any unnecessary modifications or upgrades. Such proposal shall be reviewed and approved by COMPANY, prior to finalization of loads and load cases.

c. The applicable load combinations as specified in AGES-SP-01-003, Structural Design Basis-Onshore Specification shall be considered in design unless otherwise specifically approved by COMPANY.

10.4.2 Design Verification

a. The design verification of an existing structure shall be based on structural acceptance criteria for different limit states.

b. The strength limit state shall comply with AGES-SP-01-003, Structural Design Basis- Onshore Specification, unless otherwise specified in this document or approved by COMPANY.

c. The serviceability limit state as specified in AGES-SP-01-003, Structural Design Basis- Onshore Specification shall be considered in the design, unless otherwise specifically approved by COMPANY.

d. The maximum utilization ratio (actual/allowable) for all structures shall be limited to 1.0 unless otherwise specified in this document or specifically approved by COMPANY.

e. The above limits of utilization ratio shall be applicable for strength limit state of all structural elements including foundations, connections, base-plate and anchor bolts.

10.5 Results of Assessment

10.5.1 Assessment Report

10.5.1.1 General

The results of the assessment shall be documented in a report. All the design calculations shall comply with COMPANY specifications/requirements. In general, all Calculation Notes/Reports shall indicate, but not limited to, the following:

a. The table of contents and revision history

b. Scope of Assessment

c. Description of Structure

d. Data Collection and Investigation

e. Structural Analysis

All parties consent to this document being signed electronically -PT&CS/GP/INT/2021/18407

i. Design parameters

ii. Design philosophy including engineering assumptions, if any.

iii. References of applicable codes, Standards, specifications, publications, formulas, etc. used in analysis and design.

iv. List of Loads and its calculations, loading diagrams with position and value.

v. List of Load Combinations with multiplying design factors as per applicable Codes & Standards.

f. Design Verification

g. Design Summary (for each stage of assessment)

h. Conclusions and Recommendations

i. Modification and Strengthening

j. Annexures

10.5.1.2 Scope of Assessment

This should specify the reasons for the assessment and the scope of the work, as agreed between COMPANY and CONTRACTOR/ENGINEER. The procedure and all activities for the assessment should be reported.

10.5.1.3 Description of the Structure

The structure be described in brief with pictorial views and shall include structure ID, location, structural system, together with history of the structure's original construction, subsequent alterations, past and present use.

10.5.1.4 Data Collection and Investigation

a. The documents (e.g. drawings, models, reports) collected and reviewed by ENGINEER shall be listed, together with their source.

b. It can be important to make it clear that an adequate number of inspections were made by adequately qualified people. Any limitations on the effectiveness of the inspections, due to circumstances beyond the ENGINEER's control, should be indicated.

c. When material testing is included in the ENGINEER/CONTRACTOR's scope of works, the nature and number of samples taken shall be stated together with the test location and date. The name of the agency / laboratory (that shall be selected from COMPANY's Approved Vendor List) shall be given together with the contractual arrangements for sampling and testing. The purpose and nature of the tests/analyses shall be stated, followed by a resume of the results. Copies of the laboratory reports shall be provided as an annex.

d. Inspection and Test results shall be reviewed and evaluated by a competent engineer.

10.5.1.5 Structural Analysis

The load calculations, type of analysis evaluation criteria and summary of findings shall be stated. Detailed calculations shall be reproduced in an annexure.

All parties consent to this document being signed electronically -PT&CS/GP/INT/2021/18407

10.5.1.6 Design Verification

The verification of structural safety and serviceability shall be carried out as described in Section 10.4.2. Summary of findings shall also be stated.

10.5.1.7 Design Summary

a. A brief discussion of the importance of each of the findings described under Section 10.5.1.5 and 10.5.1.6 and their relevance to the objectives of the assessment.

b. Any uncertainties remaining after the investigation and any needs for further checks should be stated here.

10.5.1.8 Conclusions and Recommendations

a. These shall be firm and reasoned judgements reached after careful assessment of the information obtained. It is prudent to discuss briefly the accuracy and limitations of the methods employed and the true significance of the findings. Every conclusion shall be based on matters contained in the preceding sections of the report.

b. Courses of action as a logical follow-up to the conclusions shall be briefly described. These shall include proposed repair, rehabilitation and upgrading options to mitigate the identified inadequacies, along with the recommended timeframe for implementation.

10.5.1.9 Modification and Strengthening

The possible options of modification and strengthening shall be reviewed and the most suitable one shall be recommended based on techno-economic evaluation. The recommended modification/strengthening shall be verified for constructability based on site condition. The detailed drawings of the selected option shall be prepared and included as part of the report.

10.5.1.10 Annexures

The items such as drawings, photographs, laboratory reports, detailed calculations, software input / output including all native files, references etc. shall be included as annexes.

10.5.2 Interventions

If the structural safety and/or serviceability is shown to be inadequate, the interventions for repair, rehabilitation or upgrading of the structure shall be performed in accordance with the recommendations of the assessment report as described in Section 10.5.1.8 & 10.5.1.9.

10.5.3 Abandon Change or/and Control of Risk

If intervention through rehabilitation, repair or upgrading is not possible due to operational reasons, then the following shall be considered:

a. If the upgrading is required due to change of structure utilization, then this change shall be abandoned

b. If the upgrading is mandated due to any integrity concerns of existing structures, then the option of controlling or modifying the risk shall be explored by CONTRACTOR/ENGINEER and proposed to COMPANY for review. Various measures to control the risk environment include imposing load

All parties consent to this document being signed electronically -PT&CS/GP/INT/2021/18407

restrictions, altering aspects of the use of the structure, implementing some form of in-service monitoring and control regime, etc.

11 COMPUTER PROGRAMS

a. The following latest computer software shall be used for the Analysis & Design of structures and foundations.

   i. STAAD Pro -- Structural Analysis & Design

   ii. Foundation 3D, Mat3D -- Foundation Design

   iii. PROKON, Limcon, MasterSeries - Connection Design *

   iv. L-Pile -- Lateral load capacity of Piles *

   v. PIGLET -- Group effect of Piles *

   *Alternative software for items iii, iv and v above may be used subject to COMPANY approval.

b. Manual calculations can be performed as required. Generic software calculation (i.e., Microsoft EXCEL) can be used for the typical manual calculations. All manual calculations, design spread sheets/calculation need to be properly validated as per standard references approved by COMPANY.

12 SPECIFIC METHODOLOGY FOR THE ADEQUACY CHECK OF EXISTING PIPE RACKS AND PROCESS STRUCTURES

12.1 General

Existing pipe racks and process structures in COMPANY plants are often utilized to route new pipes pertaining to various brownfield projects. Feasibility of utilizing the existing pipe racks and process structures should be arrived at based on the verification of structural adequacy through detailed design checks during DEFINE stage itself, in addition to verification of the space availability on these structures. The DEFINE stage adequacy check shall be validated and updated during EXECUTE stage based on final arrangement and loading data. The following sections specify the guidelines for carrying out the adequacy check of existing pipe racks/structures.

12.2 Requirement of Adequacy Check

a. In general, adequacy check of existing pipe racks / structures is advised to be carried out whenever there will be changes in the loading conditions on the structure as a result of addition of new pipes, changes in the routing or support types of existing pipes, changes in equipment size/loading, addition of platform etc., to ensure high level of safety and integrity of existing structure. However, the decision about performing a detailed adequacy check and imposing the latest codes and standards (for wind/seismic) shall be made after considering various aspects listed below, in addition to the verification methodology to be followed for structural assessment.

b. The following information will aid the decision making process on the requirement of adequacy check of an existing structure:

   i. Current physical condition of pipe rack/structure

All parties consent to this document being signed electronically -PT&CS/GP/INT/2021/18407

ii. Configuration of the pipe rack / structure (number of tiers, number of bays, height/width ratio, etc.)

iii. As built drawings (compliance with actual site conditions)

iv. Correctness of original design (application of loads, load combinations, load factors, future loads, design parameters, design codes etc.,)

v. Latest wind/seismic data vis-à-vis those used in original design

vi. Latest Code requirements vis-a-vis Code provisions in original design

vii. Line sizes and number of new pipes added, line service, new piping loads (static and dynamic)

viii. Changes in equipment sizes / loads.

ix. Previous modification details

c. The decision of the COMPANY in this regard will be binding on the CONTRACTOR / ENGINEER.

12.3 Adequacy Check Approach

In order to perform the adequacy check of existing pipe rack / structure, the CONTRACTOR / ENGINEER shall consider the following approach.

12.3.1 Existing Data Collection and Structure Categorization

a. All available existing data / information related to the pipe rack/structure and associated piping / equipment shall be retrieved from the plant documentation office (in the available format) by CONTRACTOR/ENGINEER and studied in detail. Data includes structural steel & foundation drawings, software model, design reports, piping GA drawings, piping stress analysis reports, equipment data sheets, soil investigation report & underground services layout drawing. Additional data required if any shall be obtained through field measurements. Data collection shall include inspection and test reports of steel structure and concrete elements of the pipe rack(s)/structure (s) under consideration, where available.

b. Based on the general availability of the existing data, the following categories have been proposed to carry out the adequacy check calculations:

All parties consent to this document being signed electronically -PT&CS/GP/INT/2021/18407

Table 2 Categorization based on availability of data

Existing Data	Category 1	Category 2
Structural Steel Drawings	Available	Available
Foundation Drawings	Available	Available
STAAD File (3D Space frame)	Available*	Not Available**
Structural Design Calculations (Steel & Concrete)	Available	Not Available
Piping GA Drawing / Piping Isometrics / Equipment data sheets & GA drawings	Available	Available
Pipe Loading Information ***	Available	Not Available

* Existing STAAD files may be available in an editable native format or as hard copies as a part of calculation documents. If only hard copies are available, STAAD input files shall be generated from the same.

** Existing software files (SAP, ETABS, etc.) other than STAAD if available shall also be considered as Category 2, and by utilizing the same the STAAD input files shall be suitably developed

*** Piping loads for structural design shall be as per information/ data available in existing Structural Design reports/ Piping GA /Stress Analysis Reports. Piping discipline support shall be obtained to arrive at the required data including performing required pipe stress analysis (for stress critical lines) if existing pipe loading data is insufficient/ unavailable.

c. In case any particular pipe rack/structure does not meet the above classification criteria, the approach shall be proposed by the CONTRACTOR/ENGINEER for COMPANY review and approval

12.3.2 Site Verification

a. In order to perform the adequacy check of existing pipe rack/structure accurately, all existing design data required should be the latest and confirmed to their As-Built conditions. CONTRACTOR/ ENGINEER shall verify physically on site the as-built conditions of the pipes and structural configurations.

b. Any addition, deletion or previously carried out modification of structural members noticed at site shall be recorded with full details. Physical condition of the structure for defects, distress, deformation or material deterioration such as cracks, corrosion of steel, excessive deflection, instability, connection failure, settlement, concrete spalling, etc., shall be recorded and reported along with recommendations on appropriate action to be taken. The observations at site along with existing inspection / test report findings shall be appropriately considered in the adequacy checks.

c. Any additional piping or pipe supports, change in routing or deletion of any line observed in the as-built condition with respect to available piping drawings shall be recorded as a mark-up on the existing piping general arrangement drawing or on the sectional/ elevation drawings of pipe rack/structure. From the visual observation, if any change in pipe size and type of support is suspected the same shall be clarified with COMPANY and necessary mark-ups shall be prepared.

All parties consent to this document being signed electronically -PT&CS/GP/INT/2021/18407

12.3.3 Adequacy Check Design Criteria

a. A new project specific "Design criteria for the Structural Adequacy Check and Modification of Existing Pipe-racks / Structures" shall be prepared by CONTRACTOR/ ENGINEER which shall include all design parameters, material properties and soil parameters, primary load cases, load combinations, codes/ standards, methodology for adequacy check, software, acceptance criteria (stress ratio, deflection & sway limits, foundation stability factors, allowable bearing pressure, crack width, etc.), etc. and submitted for COMPANY approval, prior to the start of adequacy check calculations.

b. Irrespective of the design basis adopted for the original design, the requirements specified in Structural Design Basis Onshore Specification, AGES-SP-01-003, shall be followed for adequacy checks. Material properties for the existing elements shall be in accordance with existing documents.

c. Regardless of whether a particular load type was included or not in the original design, all primary load types and load combinations as defined in AGES-SP-01-003, Structural Design Basis Onshore Specification shall be considered in the adequacy check calculations unless otherwise specified in this document or specifically approved by COMPANY.

d. Basis of piping loads calculations for structural design shall be as per Section 12.5.1 and 12.5.2 for Category 1 and Category 2 structures respectively

12.4 Adequacy Check General Requirements

The CONTRACTOR/ ENGINEER shall consider the following requirements while performing the adequacy check on existing pipe-racks / structures.

12.4.1 Pipe-rack Extents

a. The extents of pipe-racks considered for analysis/ design check shall be generally between the expansion joints. For pipe-racks having similar structural configuration / loading extended for large lengths, grouping by forming modules for analysis/ design check can be acceptable. However, the modules selected shall contain the most critical loading conditions, member sizes, support/ anchor types & locations, etc., for the extent of pipe-rack considered.

b. The extent of selected modules need not necessarily be the same as the ones considered in the original design calculations. Software models for any additional modules shall be generated and analysis/ design checks carried out accordingly.

c. Grouping shall be based upon similarity in terms of structural configuration, existing/new pipe sizes, support types and their locations, foundation types, earlier implemented modification, etc. and shall adequately represent the entire length of pipe-racks. Any portion of pipe-rack not covered in the existing design calculations shall be modelled and analyzed separately.

d. When grouping is adopted, the CONTRACTOR/ENGINEER shall first submit a proposal to COMPANY indicating the proposed grouping along with its basis, and obtain COMPANY approval prior to proceeding with the adequacy checks.

e. Whenever only a partial stretch of the utilized pipe rack is analyzed for adequacy checks owing to grouping approach, and the adequacy outcome calls for strengthening or modification of structure/foundation, then the strengthening/modification details/drawings for the entire stretch of the pipe rack under consideration shall be developed. Additional module from the group may be

All parties consent to this document being signed electronically -PT&CS/GP/INT/2021/18407

considered by the CONSULTANT for adequacy check in order to minimize the modifications in case the representative module from the group results in significant modifications.

12.4.2 Codes and Standards

a. All design and engineering shall conform to the latest issue of international codes and standards except where COMPANY specifications, Local statutory codes and regulations indicate otherwise.

b. One set of Codes (either British / European or American) shall be followed uniformly for loads/ load combinations and design of structural elements, except the Seismic loads for which ADIBC (based on American Codes) shall be used.

12.4.3 Software and Structure modelling

a. Irrespective of the type of software used in earlier calculations, Structural Analysis and Design software to be used for the project shall be the latest version of STAAD Pro.

b. Editable native files of STAAD, software (if any) / Excel sheets used for foundations design, connections design, etc., and drawings shall be provided to the COMPANY along with the review submittals/ final dossier/ As-Built package.

c. FOUNDATION 3D and MAT3D for foundation design and PROKON / STAAD for connection design are the software preferred by the COMPANY. For the preparation of drawings AUTOCAD or Micro-Station software (as decided by COMPANY) to be used.

d. CONTRACTOR/ ENGINEER shall review and validate all original and revised structural models/ design calculations of the previous projects for “as-is condition” of the structure at site. CONTRACTOR/ ENGINEER could utilize the existing calculations/ models and validate /update them as required or prepare independent calculation reports / 3D models in STAAD capturing all information from the available reports. COMPANY makes no assurance with respect to the correctness or completeness of the existing structural models/ design calculations and drawings, if provided.

e. Existing STAAD 3D models where available as native files or generated from the hard copies shall be validated/ checked for the as-is (actual) structural configuration, loads, load combinations, all design parameters (e.g., PY, UNL, LY, LX, KZ, KY, MAIN, BEAM, DFF, RATIO, FYLD, UNT, UNB, etc.) and other aspects to eliminate the discrepancies / design issues on the structure (e.g., inadequate design parameters, unrealistic loadings, missing members, etc.).

12.4.4 Loads and Load Combinations

a. All load cases and load combinations as per AGES-SP-01-003, Structural Design Basis- Onshore Specification shall be considered unless otherwise approved by COMPANY. Load factors in the load combinations (strength design and allowable stress design) shall be as per applicable design codes.

b. Hydro-test load conditions and operating load conditions of new pipe(s) shall be considered from the piping stress analysis report, along with the existing piping operating loads.

c. Hydro test loading for only new piping and equipment need be considered for assessment of existing structures. All existing piping and equipment will either be empty or in operation whichever gives unfavourable condition to the structures unless otherwise dictated due to operation / testing requirements. This may require creation of additional load combination which shall be addressed appropriately.

All parties consent to this document being signed electronically -PT&CS/GP/INT/2021/18407

d. Piping loads for existing pipes equal to or less than 8" diameter can be applied as Uniformly Distributed Load (UDL) on the supporting beams where the stress analysis reports are not available; if the stress analysis reports are available, actual concentrated loads shall be applied. Piping loads for pipes 10" diameter and above (including the weight of piping, product, valves, fittings and insulation) shall be applied as concentrated loads. These loads if not available in existing documentation shall be provided as per Section 12.5.1 and Section 12.5.2.

e. Future loading as specified in AGES-SP-01-003, Structural Design Basis- Onshore Specification shall be considered in the un-utilized future space for adequacy check unless otherwise advised by Piping / approved by COMPANY. While calculating the intensity of existing piping load at a particular pipe rack tier/level, the actual width occupied by existing pipes only shall be considered. Future loads shall include both vertical and horizontal components (i.e. anchor stop / line stop / guide / friction loads) of loads irrespective of what has been considered in the existing calculations.

12.4.5 Design checks

a. Regardless of the extent of the design checks found in the existing design calculations, the CONTRACTOR/ ENGINEER shall carry out all the checks as per approved project adequacy check design criteria and Structural Design Basis- Onshore Specification, AGES-SP-01-003.

b. Adequacy check calculations of structures and foundations shall include but not limited to the following design checks:

<u>Structures:</u>

i. Member stress ratios

ii. Check for torsional forces/ moments

iii. Connection designs (Applicable for EXECUTE or Detail engineering projects)

iv. Base plate, Anchor bolts

v. Deflection / sway checks

<u>Foundations:</u>

i. Bearing pressure, stability checks for foundations

ii. Footing thickness and Reinforcement checks

iii. Crack width calculations

iv. Other checks as per the requirements of COMPANY Specification / Addenda

c. Drawings submitted by the CONTRACTOR/ ENGINEER shall be considered approved only after the approval of related design calculation reports.

12.5 Structural Adequacy Check Procedure

Based on the categorization of the structures as defined in Section 12.3.1, the CONTRACTOR/ ENGINEER shall consider the following procedure for the adequacy check.

All parties consent to this document being signed electronically -PT&CS/GP/INT/2021/18407

12.5.1 Category 1 Structures

12.5.1.1 Design Approach

a. Available existing STAAD 3D model shall be validated and updated to actual as-built condition based on site observations, and latest codes and standards, and shall address the structural configuration, loads, load combinations and design parameters considering also the interface projects. This updated and validated model and its analysis results will be used for the adequacy checks for the new / additional loading.

b. For existing piping, the piping loads shall be as per information / data available in existing Structural Design reports/ Piping GA /Stress Analysis Reports. The loads from the new pipes/ equipment/ platforms shall be applied as additional loads wherever applicable in accordance with the piping/ platform GA drawings. The new pipe loads shall be obtained from piping discipline; for all stress critical lines the loads shall be as per stress analysis reports and for non-stress critical lines it shall be calculated by manual methods. The UDL (if any in existing model / calculations) within the zones of the new pipe loads shall be omitted. Empty spaces on pipe-rack beams shall be considered with future piping loads. The cross sections of pipe-rack clearly indicating the sizes, spacing and loadings of existing pipes and new pipes on the pipe-rack at different levels shall be provided

c. The results of adequacy check for steel structure and foundation shall be verified and modifications proposed where required, to limit the stress ratios within permissible limits. For example, members of steel structure which are having maximum combined stress ratio of more than 1.0 are identified and recommended for modifications and strengthening. The stress ratio of modified members is to be kept less than 0.9 for unity check. In addition to the stress ratio, deflection and lateral sway are also required to be maintained within the allowable limits.

12.5.1.2 Design Procedure

The analysis and design procedure to be followed is described below:

a. Analyze the existing STAAD model (verified and updated as per As-Built conditions) in accordance with the project design criteria described in Section 12.3.3 above - (1st stage).

b. Check design results of all the structural members. Also check the design of existing foundations, base plate and anchor bolts based on STAAD analysis support reaction forces - (1st stage).

c. Add new piping/ equipment/ platform loads to the existing STAAD model (with existing piping/equipment loads) and add new members to support new pipe lines, if required - (2nd stage).

d. Analyze the revised model (in step c) and check the results of structural members. Also check existing foundations (for stability and bearing pressure), base plate and anchor bolts based on the support reactions from STAAD analysis - (2nd stage).

e. List all the structural members, the design results of which are exceeding the permissible limits - (2nd stage).

f. Propose suitable modifications and strengthening for the above identified structural members so as to keep the member stresses and displacements within permissible limits - (3rd stage).

g. Analyze the modified structure and demonstrate all structural components, foundations including reinforcement, base plates, anchor bolts, etc. are adequate and safe - (3rd stage).

All parties consent to this document being signed electronically -PT&CS/GP/INT/2021/18407

h. Check existing connections capacity and provide suitable modifications/strengthening as required and also develop connection details for new members – (3rd stage). Connection design check shall be performed at 2nd Stage itself if no modifications to structure are identified.

i. It is required to propose suitable modifications to the structural members if their utilization ratios in the existing condition (before addition of new pipes/loads) are found to be exceeding the limiting values.

j. The different stages involved in the pipe rack adequacy check analysis are illustrated in the sketch furnished in Appendix A2.

12.5.2 Category 2 Structures

12.5.2.1 Design Approach

a. This approach shall be followed when original design calculations were made using a software other than STAAD or when STAAD models and existing piping load information are unavailable for the existing structure

b. Adequacy check shall be performed using STAAD 3D model which is newly generated based on existing drawings and site verifications. Data from any other software (SAP, ETABS, etc.) used in the existing calculations if available can be utilized suitably. Additional members to support additional pipes, if required, shall also be included in the model.

c. For existing piping, piping loads shall be as per information/ data available in existing Structural Design reports/ Piping GA /Stress Analysis Reports. In case this information / data is not available following methodology shall be followed:

   i. For piping sizes 8” and below the piping loads shall be considered based on details furnished in 12.4.4.

   ii. For piping sizes 10” and above with design temperature 150° C or more, CONTRACTOR/ ENGINEER shall carry out stress analysis as per Piping Flexibility Analysis Specification, AGES-SP-09-004.

   iii. For piping sizes 10” and above with design temperature less than 150°C, CONTRACTOR/ ENGINEER shall estimate piping loads by manual method.

   Alternatively, for existing piping, CONTRACTOR/ ENGINEER shall propose a methodology to calculate the piping loads (including anchor, guide/ restraint loads, etc.) i.e., either manual calculation or computer stress analysis as per Project requirements. The adopted methodology shall be covered in the Project specific document “Design criteria for the Structural Adequacy Check and Modification of Existing Pipe-racks / Structures” and shall be submitted for COMPANY approval.

   The loads from the new pipes/ equipment/ platforms shall be applied as additional loads wherever applicable in accordance with the piping/ platform GA drawings.

   The new pipe loads shall be obtained from piping discipline. For all stress critical lines the loads shall be as per stress analysis reports and for non-stress critical lines it shall be calculated by manual methods. The UDL (if any in existing model/calculations) within the zones of the new pipe loads shall be omitted. Empty spaces on pipe-rack beams shall be considered with future piping loads. The cross sections of pipe-rack clearly indicating the sizes, spacing and loadings of existing pipes and new pipes on the pipe-rack shall be provided.

All parties consent to this document being signed electronically -PT&CS/GP/INT/2021/18407

d. The results of adequacy check for steel structure and foundation shall be verified and modifications proposed where required, to limit the stresses within the permissible limits. In addition to the stress ratio, deflection & lateral sway are also required to be maintained within the allowable limits.

12.5.2.2 Design Procedure

a. Generate STAAD 3D model of the pipe-rack based on available existing structural drawings/ site as built verification and apply the estimated existing piping loads as per Piping GA drawings/ site as built verification & Piping Stress analysis (if required & also based on the pipe diameters) – (1st Stage).

b. Analyze STAAD 3D model in accordance with the project design criteria described in Section 12.3.3. above - (1st Stage).

c. Same as steps 'b' to 'i' of Category 1 structures.

d. The different stages involved in the pipe rack adequacy check analysis are illustrated in the sketch furnished in Appendix A2.

12.6 Connections Design Check

a. The adequacy of existing connections shall be checked for the following members :

   i. The connections of all the members which are either strengthened or modified.

   ii. The connections of other existing members, the stress ratio of which are greater than 0.5 (at any stage of the Design procedure).

   iii. The connections of all newly added members.

b. The verification of existing connection adequacy shall be carried out through any of the following ways according to the availability of the connection data:

   i. Where existing connections design capacities are available from existing reports, the actual connection forces (from final stage) shall be verified with the existing capacity.

   ii. Where existing connection design reports are unavailable but drawings are available with connection details, the actual connection forces (from final stage) shall be verified with the capacity calculated based on the existing connection detail drawings.

   iii. For cases other than the above, the actual connection forces (from final stage) shall be verified with the capacity calculated based on the connection details obtained through site measurements/surveys.

c. In case of lack of bolt data (material grade / capacity) and bolt material test certificates, laboratory tests shall be performed on the bolts as advised by the COMPANY.

12.7 Anchor Bolts and Base Plates Design Check

a. Anchor bolts checks shall be performed considering the bolt capacities calculated in accordance with AGES-SP-01-004, Anchor Bolts and Grouting Specification.

b. Thickness and size of base plates shall be verified.

c. The corrosion allowance for anchor bolts and base plates shall be in accordance with COMPANY Specifications.

All parties consent to this document being signed electronically -PT&CS/GP/INT/2021/18407

12.8 Foundations Design Check

a. Geotechnical Report applicable for the relevant section of the pipe-racks/ structure shall be considered with specific attention to the ground water levels, allowable bearing capacity at different depths and other required soil parameters.

b. Existing foundations shall be checked for all aspects, i.e., bearing pressure, stability (with and without soil overburden condition), footing thickness and reinforcement, crack width, etc. Based on the results, the foundations requiring modifications / strengthening shall be identified.

12.9 Results and Reporting

The following requirements shall be considered in the reporting of the adequacy check results of pipe racks and process structures, in addition to the general requirements stated in Section 10.5.1.

12.9.1 Results Summary

a. The report shall be presented in a self-explanatory style with adequate descriptions and detailed computations, supplemented with model coloured images (input and output) and relevant reference documents. The document format and quality shall be in a such a way that the contents are clearly legible and easily searchable.

b. The adequacy check calculations shall include the summary of the design check results for each stage of the design procedure as described in Sections 12.5.1.2 and 12.5.2.2

12.9.2 Adequacy Check Report

a. A comprehensive technical report comprising all the necessary data, details and drawings, but not limited to the following shall be submitted for COMPANY review and approval:

   i. Executive summary

   ii. Introduction / background /purpose

   iii. Design philosophy

   iv. Reference documents including a complete list of referred existing documents/drawings

   v. Material and design parameters

   vi. Design Loads and Load combinations

   vii. Load calculations

   viii. Structural analysis and design results at each stage (stress ratio, deflection check, sway check, etc.), and Adequacy check outcome

   ix. Member connections, base plate and anchor bolt design check results

   x. Foundation design results at each stage (bearing pressure, stability, footing thickness, reinforcement, crack width, etc.)

   xi. Proposed modification/strengthening design & drawings (structure & foundation)

   xii. New structural steel/foundation design & drawings

   xiii. Sequence of execution of works based on the design considerations

All parties consent to this document being signed electronically -PT&CS/GP/INT/2021/18407

xiv. Conclusions and recommendations

xv. STAAD 'input' data and results output (to be included in an Appendix).

b. In addition, the native files of structural analysis (related to all the stages of the design procedure described in Section 12.5.1.2 & 12.5.2.2), foundation design, connection design, base plate and anchor bolt design shall be furnished along with the above report.

13 MODIFICATION AND STRENGTHENING DESIGN

a. Based on the results of adequacy check performed for a specific project, modification/strengthening of the failed components of the structure and foundation shall be carried out as per the recommendations of this section.

b. For DEFINE projects, modification drawings shall show the extent of modifications with adequate details to enable EXECUTE CONTRACTOR to evaluate the quantum of work involved. Constructability and spatial requirements shall be studied in detail while preparing the modification/ strengthening details.

c. The modification drawings prepared for EXECUTE projects shall have all the information and details necessary to proceed with construction including the temporary support design calculations/ drawings, erection/ construction sequences, etc. required for the demolition/ replacement of foundations and structural members.

13.1 Steel Structure Modification

a. CONTRACTOR / ENGINEER may follow the below suggested ways of modification/ strengthening of steel structure/ components or propose his own, with detailed design for COMPANY approval:

i. By adding new beam(s) *

ii. By reducing the span of failed beam by introducing knee braces (if feasible and acceptable)

iii. Replacement of failed beam (if feasible)

iv. Welding cover plates to flanges and web plates to failed beam/column for full or partial length of the beam/column

v. Weld cut section to bottom flange of failed beam to reinforce the existing beam

vi. Adding additional braces and tie beams (horizontal plane and/or vertical plane)

* End connection detail (new member to existing) having minimum or no site welding should be developed to avoid hot work in operating facilities.

b. For revamping/strengthening of existing structures, it is preferred to use material grade/profile of new structural elements similar to existing elements.

c. Feasibility of carrying out modification or addition of steel members to the structure shall be verified at Site and the most appropriate technique shall be adopted. Stress ratio of strengthened members shall not exceed the limits specified in preceding Sections.

d. Refer typical details of steel structure modification/ strengthening furnished in Appendix A3 for guidance purpose.

e. On pipe-racks (both existing and modified), use of cantilever bracket type of structural arrangement for supporting 16" and above size pipes shall be avoided unless specifically approved by

All parties consent to this document being signed electronically -PT&CS/GP/INT/2021/18407

COMPANY. Option of routing the new pipe within the span of existing pipe-rack frames shall be considered as the first choice. Only in exceptional cases, where adequate space is unavailable to accommodate the new pipe within the frame, routing of the new pipe on the outer side of the rack is to be considered. In such cases, extension of frame in transverse direction by introducing new column(s)/ foundations shall be considered as the primary option.

f. If it is concluded that cantilever bracket support is the only feasible option to support the new piping, following design conditions shall be adhered to:

   i. Utilization ratio of structural members of cantilever bracket and its connections shall be limited to 0.5.

   ii. Cantilever bracket and knee bracing connections shall be connected to the existing / new pipe-rack columns using an end plate with minimum four bolts. Refer a typical sketch in Appendix A3

   iii. The cantilever beam shall be laterally restrained using plan bracings.

13.2 Foundation Modification

a. Foundations already subjected to extension/ modification under earlier projects should not be considered for further modifications. Alternative arrangements to avoid foundation modification need to be investigated in the analysis/ design. However, if modification is inevitable, then COMPANY prior approval shall be obtained for the same.

b. Also, any clashes with underground services/ adjacent foundations need to be verified from the As-Built underground services drawings and site verifications, prior to finalizing any modifications. In case of non-availability of underground services drawings, underground detection survey or trial pit excavations shall be performed as applicable.

c. Foundations may be strengthened by increasing the plan size and thickness of the existing footing. This can be accomplished by construction of a concrete jacket on the sides and top of the existing footing with proper reinforcement. Particular attention must be given for surface preparation at the interface between old and new concrete to ensure proper bonding between the two. Where the foundation fails in stability, plain concrete filling over existing footing may be considered.

d. Refer typical details for strengthening of foundation furnished in Appendix A4 for guidance purpose.

e. Reinforcement bars of the new jacket shall be designed and installed into the existing footing/ pedestal using approved chemical adhesive in drilled holes. Embedment depth / anchorage length of the post-installed rebar shall be properly designed in accordance with Manufacturer's recommendations / relevant codes and standards in order to ensure proper transfer of loads. The post-installed rebar embedment depth design calculations shall be submitted for COMPANY approval. Manufacturer's recommendations related to drilling and cleaning of holes and fixing of the rebars shall be covered with sufficient details and notes in the drawings

f. Before implementing the proposed modifications, EXECUTE CONTRACTOR shall perform a risk assessment to ensure the integrity of the existing foundation/pedestal is not endangered due to modification activities such as removal of soil, surface preparation, drilling holes, etc. and propose suitable mitigation plans.

All parties consent to this document being signed electronically -PT&CS/GP/INT/2021/18407

13.3 Connection Modification

a. CONTRACTOR / ENGINEER may follow the below suggested ways of modification/ strengthening of steel connections or propose his own and submit detailed connection design calculations for COMPANY approval:

   i. Adding welds at the perimeter of connections

   ii. Replacing existing structural bolts with higher capacity (high strength bolts)

   iii. Converting single shear connection to double shear by adding cleat angle or plate

   iv. Replacing the existing connection with higher capacity, where replacement of connecting member is considered due to identified inadequacy

   v. Adding post-installed anchors, where the support reaction forces exceed the capacities of existing anchor bolts.

b. Any change in the member end condition/boundary condition (e.g. 'Pinned' to 'Fixed') due to connection modifications such as addition of structural bolts, welds, post installed anchors, etc. shall be adequately accounted in the analysis and design of structure, foundation and structural components (such as pedestal, base plate, connections, anchor bolts, etc.).

c. Refer typical detail of modification/ strengthening of connections furnished in Appendix A3 for guidance purpose.

13.4 Temporary Support Requirement and Design

a. Requirements for providing temporary support to the structure / pipes until completion of modification works shall be determined and designed by the CONTRACTOR / ENGINEER.

b. Temporary Supports using scaffold material shall generally be avoided unless specifically approved by COMPANY.

c. Drawings and design calculations for proposed temporary support shall be submitted for COMPANY approval.

14 ADDITIONAL SPECIFIC REQUIREMENTS

Not applicable.

All parties consent to this document being signed electronically -PT&CS/GP/INT/2021/18407

SECTION C – OTHER REQUIREMENTS

15 QUALITY PLANS

15.1 General

a. Quality plans shall address all aspects related to local conditions, such as climatic conditions, backup facilities, spare parts, transport possibilities, storage facilities, quarries, local Manufacturer/Suppliers, test facilities (field laboratory).

b. Quality Management Systems shall comply with the applicable requirements of BS EN ISO 9001 "Quality Management Systems- Requirements" and BS EN ISO 9004, "Quality management – Quality of an organization – Guidance to achieve sustained success". Written quality plans and procedures shall be submitted for COMPANY approval.

c. Materials should be obtained from the same source(s) throughout the work (including both trial and production mixes).

15.2 Inspection, Testing and Reporting

a. Inspection and Test Plans (ITPs) identifying the tests, frequencies, acceptance criteria, and responsibilities shall be prepared as part of the quality plan. COMPANY will mark-up CONTRACTOR ITPs for COMPANY associated monitor, witness or inspection hold points

b. A reporting system of Quality Control Records (QCRs) shall be part of the quality plan.

c. The reporting system shall record all results obtained during the testing.

d. Weather conditions shall be recorded in the quality results.

e. The proposed ITPs and QCRs shall be included in the Quality Plan.

f. Standard forms of inspection and test plans shall be used as a basis for the development of the ITPs and QCRs supplemented by the requirements of the specifications for the work to be executed.

g. COMPANY reserves the right to make inspections of the source of supply of materials.

h. Prior to supply of any material to site the CONTRACTOR shall obtain COMPANY approval by submitting necessary documentation such as test certificates, source of supply, date of manufacture, etc.

15.3 Quality Control and Assurance

a. CONTRACTOR shall be solely responsible for quality control of all materials and workmanship. The quality system shall provide for the planned and systematic control of all quality-related activities performed during design and construction. Implementation of the quality system shall be in accordance with the Project Agreement, CONTRACTOR's approved Quality Manual and Project Specific Quality plan.

b. CONTRACTOR shall ensure that SUB-CONTRACTORs, SUPPLIERs and MANUFACTURERs have in place a QA/QC program which clearly establishes the authority and responsibilities of those responsible for the quality system. Persons performing quality functions shall have sufficient and well-defined authority to enforce quality requirements that they initiate or identify and to recommend

All parties consent to this document being signed electronically -PT&CS/GP/INT/2021/18407

and provide solutions for quality problems and thereafter verify the effectiveness of the corrective action.

c. Quality System and Quality Control requirements shall be identified and included in CONTRACTOR's Purchase documentation. Based on these requirements, the SUB-CONTRACTORs, SUPPLIERs and MANUFACTURERs will develop QA/QC programs which shall be submitted to COMPANY and CONTRACTOR for review and concurrence. The SUB-CONTRACTOR's, SUPPLIER's and MANUFACTURER's QA/QC programs shall extend to SUB-SUPPLIERs.

d. CONTRACTOR shall submit certified reports of all tests as soon as the tests are completed satisfactorily.

e. COMPANY reserves the right to inspect or to conduct a quality audit of materials, installation and workmanship standards and shall have unrestricted entry to the construction site and to testing laboratories to witness any or all tests. SUB-CONTRACTORs, SUPPLIERs and MANUFACTURERs, within 30 days after award but prior to the pre-inspection meeting, shall provide CONTRACTOR and COMPANY with a copy of its Inspection & Testing Plan for review and inclusion of any mandatory CONTRACTOR and COMPANY witness or hold points.

f. COMPANY may reject improper, inferior, defective, or unsuitable materials, installation and workmanship. All materials and workmanship rejected shall be replaced by CONTRACTOR as directed by the COMPANY.

16 SUB-CONTRACTORS AND SUPPLIERS

a. CONTRACTOR shall assume unit responsibility and overall guarantee for the works.

b. CONTRACTOR shall transmit all relevant Purchase Order documents including specifications to his SUB-CONTRACTORs and SUPPLIERs.

c. It is CONTRACTOR'S responsibility to enforce all Purchase Order and Project Specification requirements on its SUB-CONTRACTORS and SUPPLIERS.

d. CONTRACTOR shall submit all relevant SUB-CONTRACTOR and SUPPLIER engineering data to COMPANY.

e. CONTRACTOR shall obtain and transmit all SUB-CONTRACTOR and SUPPLIER warranties to COMPANY.

f. All drawings and engineering data submitted to COMPANY shall be in the English language, and in metric units.

17 MATERIAL CERTIFICATIONS

CONTRACTOR is responsible for the supply of all materials conforming to the relevant codes and standards, including all supply of material certificates/testing.

18 DOCUMENTATION / MANUFACTURER DATA RECORDS

a. CONTRACTOR shall submit for COMPANY approval the drawings, documentation or information as listed in the individual Material Requisitions and Purchase Orders.

b. CONTRACTOR shall maintain a complete up-to-date set of construction drawings at the jobsite.

All parties consent to this document being signed electronically -PT&CS/GP/INT/2021/18407

c. Mutual agreement on scheduled submittal of drawings and engineering data shall be an integral part of any formal Purchase Order.

d. Comments made by COMPANY on drawing submittals shall not relieve CONTRACTOR of responsibility to meet the requirements of ADNOC General Specifications. Comments by COMPANY shall not be construed as permission to deviate from requirements of the Purchase Order unless specific and mutual agreement is reached and confirmed in writing.

e. Each drawing shall be provided with a title block in the bottom right hand corner incorporating the following information:

   i. Official trade name of the company.

   ii. CONTRACTOR's drawing number.

   iii. Drawing title.

   iv. A symbol or letter indicating the revision number.

f. Revisions to drawings shall be identified with symbols adjacent to the alterations. A brief description of each revision shall be given and, where applicable, the authority and date of the revision shall be listed. The term "Latest Revision" shall not be used.

g. Prior to commencement of construction CONTRACTOR shall submit an "Affidavit of Compliance" that confirm that all materials meet the requirements of this Specification.

h. The following documents shall be submitted to COMPANY prior to the start of construction activities:

   i. Inspection and Test Plan (ITP).

   ii. Inspection Procedures.

   iii. Test Procedure Qualification and Test Acceptance Criteria.

   iv. Procedure Qualification Record (PQR).

   v. Quality control program, quality plan, quality control procedure, including Quality Control Records (QCR's), records of quality inspection test reports, and test results.

   vi. Material Handling Procedure.

   vii. Materials and workmanship specifications.

   viii. One set of final drawings.

   ix. Maintain a complete set of As Built drawings at the jobsite.

   x. Method statements covering all construction activities.

   xi. Correction of non-conformances including remediation procedures.

   xii. Material Traceability Procedure.

All parties consent to this document being signed electronically -PT&CS/GP/INT/2021/18407

SECTION D – STANDARD DRAWINGS & DATA SHEETS

19 DATASHEET TEMPLATES

Not applicable.

20 STANDARD DRAWINGS

Not applicable.

All parties consent to this document being signed electronically -PT&CS/GP/INT/2021/18407

SECTION E - APPENDICES

Appendix-A1: Flow Chart for General Assessment of Existing Structures

Appendix-A2: Pipe-rack Adequacy Check Analysis/Design Stages

Appendix-A3: Typical Steel Structure Modification/Strengthening Details

Appendix-A4: Typical Foundation Modification/Strengthening Details

All parties consent to this document being signed electronically -PT&CS/GP/INT/2021/18407

APPENDIX A1. FLOW CHART FOR GENERAL ASSESSMENT OF EXISTING STRUCTURES

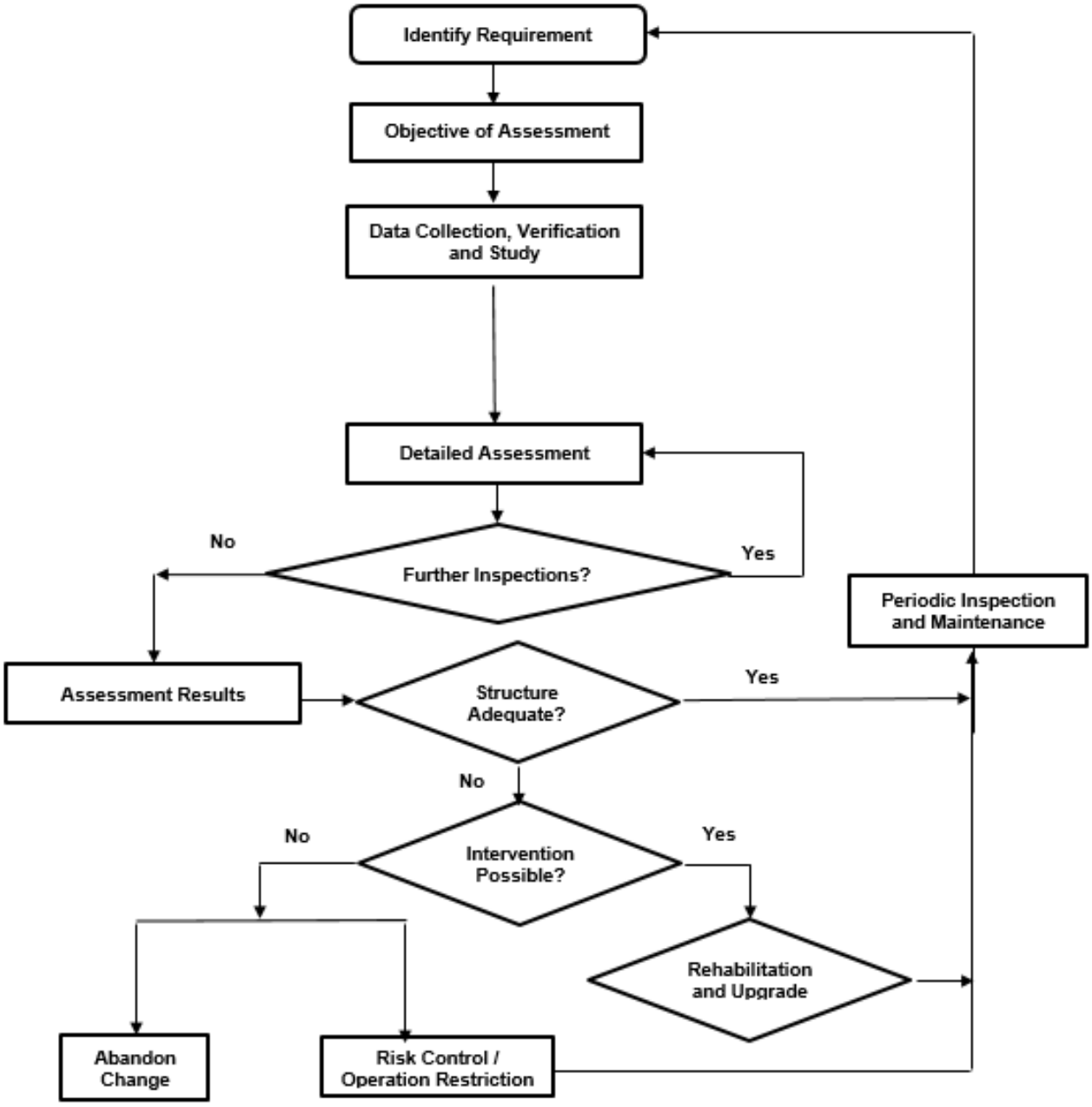

All parties consent to this document being signed electronically -PT&CS/GP/INT/2021/18407

APPENDIX A2. PIPE RACK ADEQUACY CHECK ANALYSIS / DESIGN STAGES

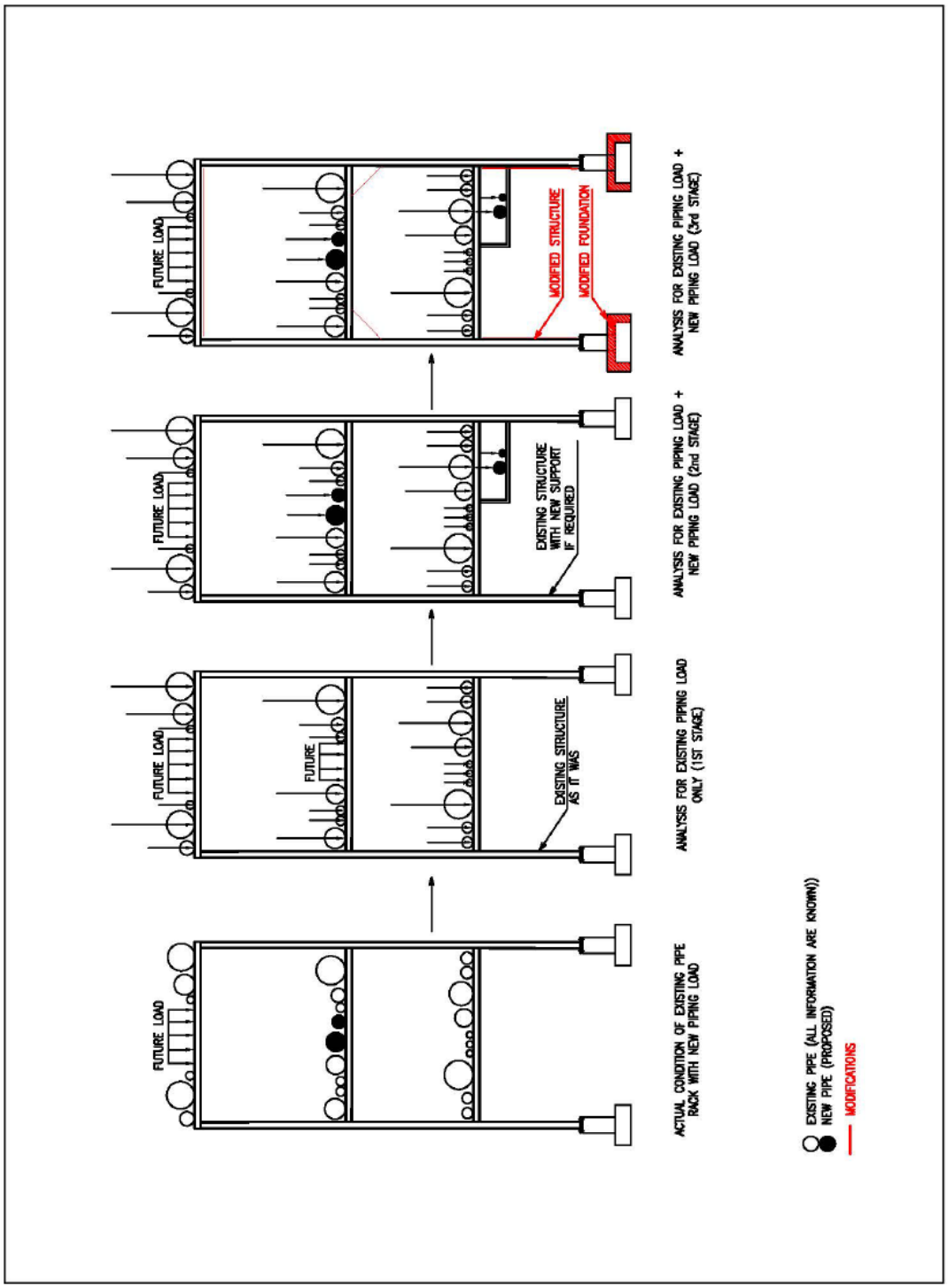

All parties consent to this document being signed electronically -PT&CS/GP/INT/2021/18407

APPENDIX A3. TYPICAL STEEL STRUCTURE MODIFICATION/ STRENGTHENING DETAILS

a. The details shown here are indicative and for guidance only.

b. Feasibility of implementing suggested modifications for the actual structure shall be verified based on site conditions, before proposing it.

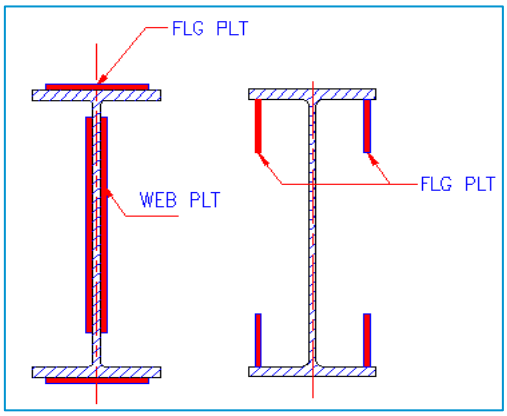

WELDING FLANGE/ WEB PLATES

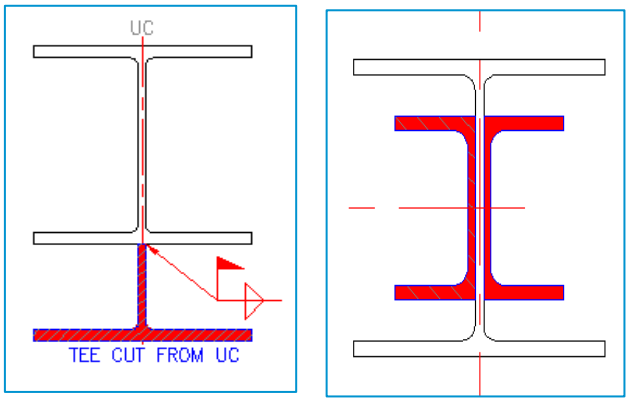

WELDING CUT SECTION

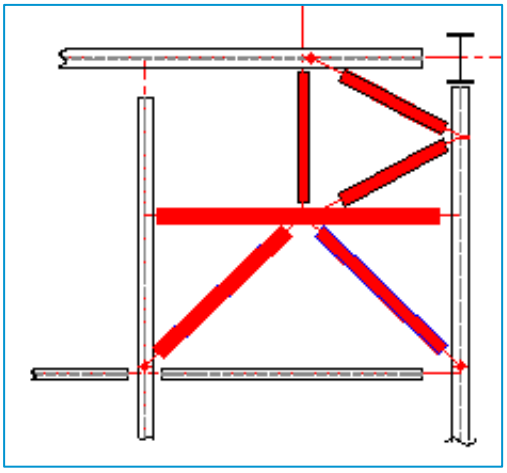

ADDING TIE BEAMS & BRACES

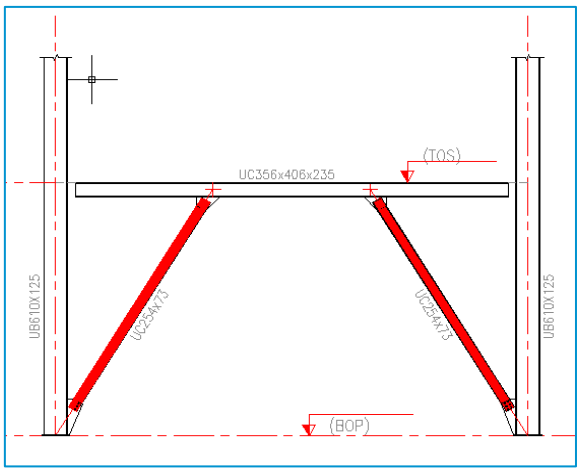

REDUCING THE SPAN

All parties consent to this document being signed electronically -PT&CS/GP/INT/2021/18407

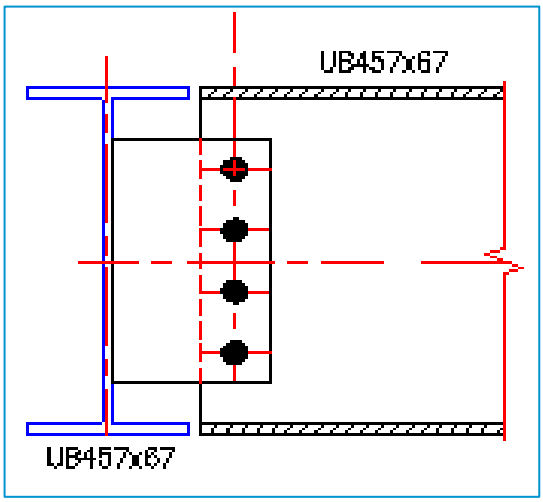

REPLACEMENT BOLTS

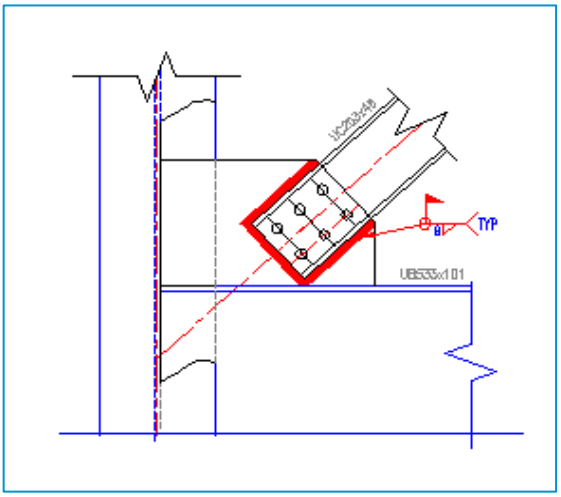

ADDING WELDS

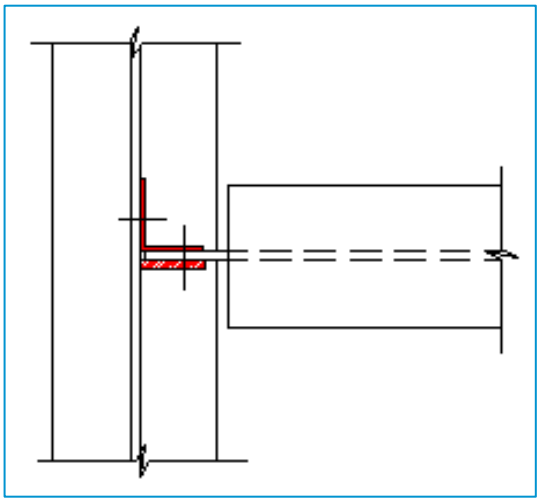

SINGLE TO DOUBLE SHEAR

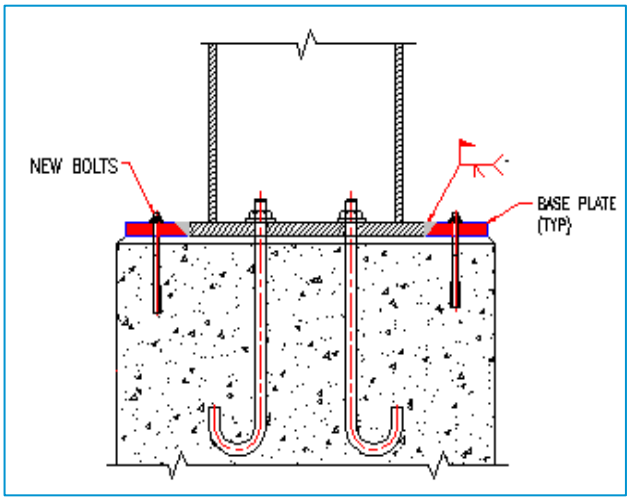

ADDING POST-INSTALLED ANCHORS

All parties consent to this document being signed electronically -PT&CS/GP/INT/2021/18407

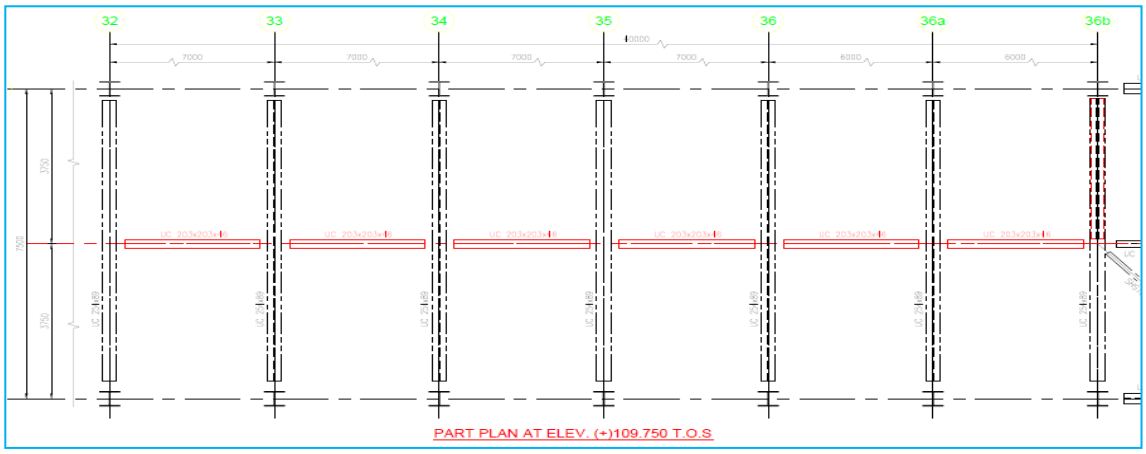

ADDING TIE BEAMS IN ALL SPANS (PLAN VIEW)

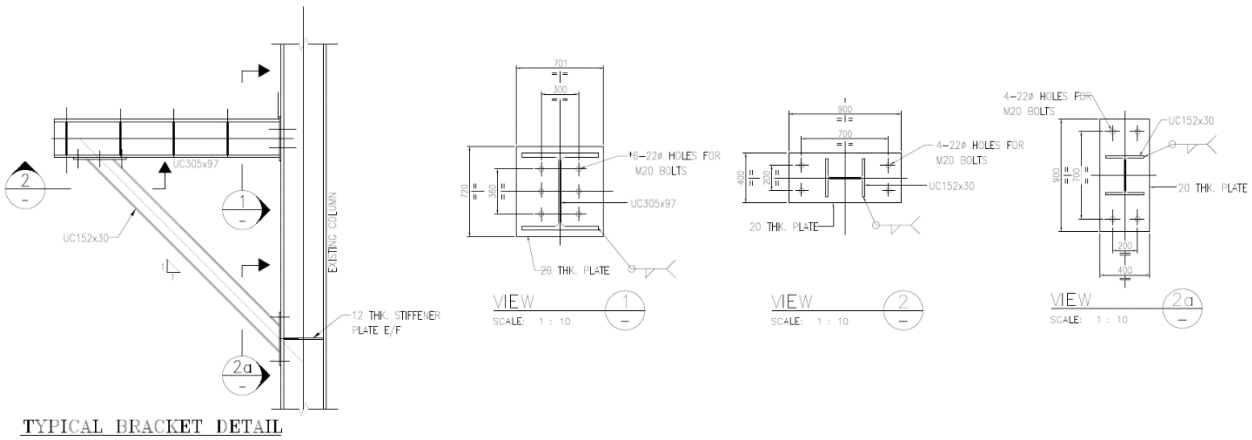

TYPICAL CANTILEVER BRACKET CONNECTION DETAILS

All parties consent to this document being signed electronically -PT&CS/GP/INT/2021/18407

APPENDIX A4. TYPICAL FOUNDATION MODIFICATION/STRENGTHENING DETAILS

a. The details shown here are indicative and for guidance only.

b. Feasibility of implementing the suggested modifications for the actual foundation shall be verified based on site conditions, before proposing it.

c. Before implementing the proposed modifications, EXECUTE CONTRACTOR shall perform a risk assessment to ensure the integrity of the existing foundation/pedestal is not endangered due to modification activities such as removal of soil, surface preparation, drilling holes, etc.

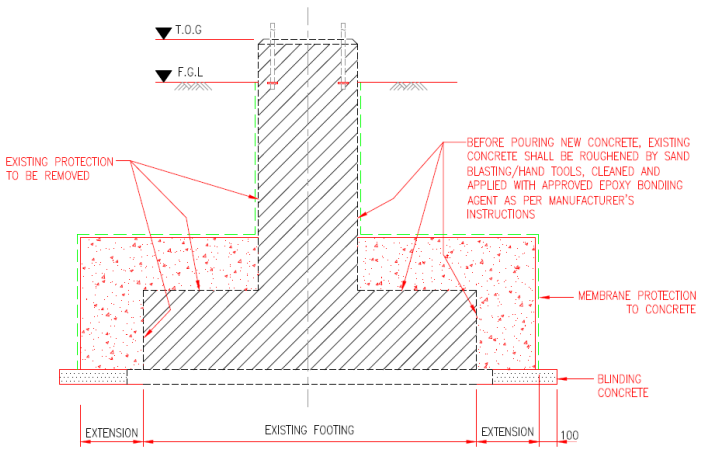

TYPICAL FORM WORK SECTION

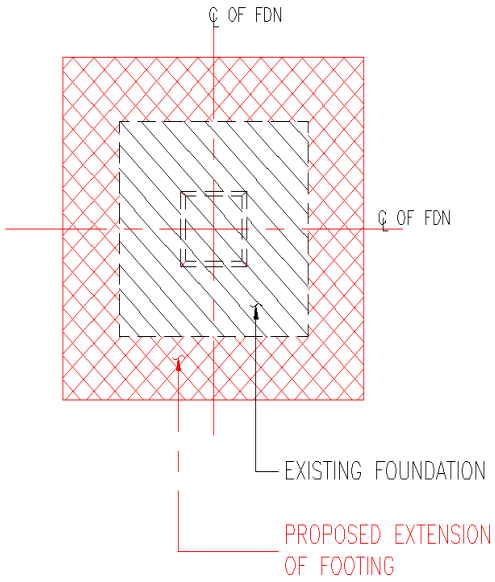

PLAN

ENLARGING THE FOUNDATION (FORM WORK DETAILS)

All parties consent to this document being signed electronically -PT&CS/GP/INT/2021/18407

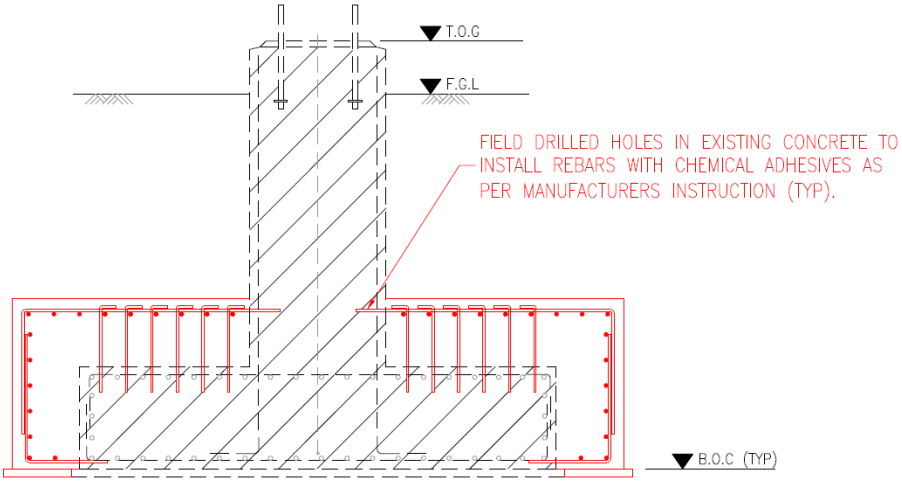

REINFORCEMENT DETAIL

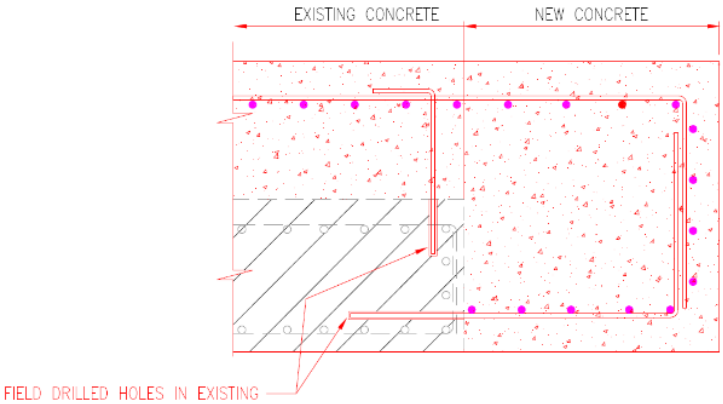

TYPICAL CONNECTION DETAIL

ENLARGING THE FOUNDATION (REINFORCEMENT DETAILS)

All parties consent to this document being signed electronically -PT&CS/GP/INT/2021/18407

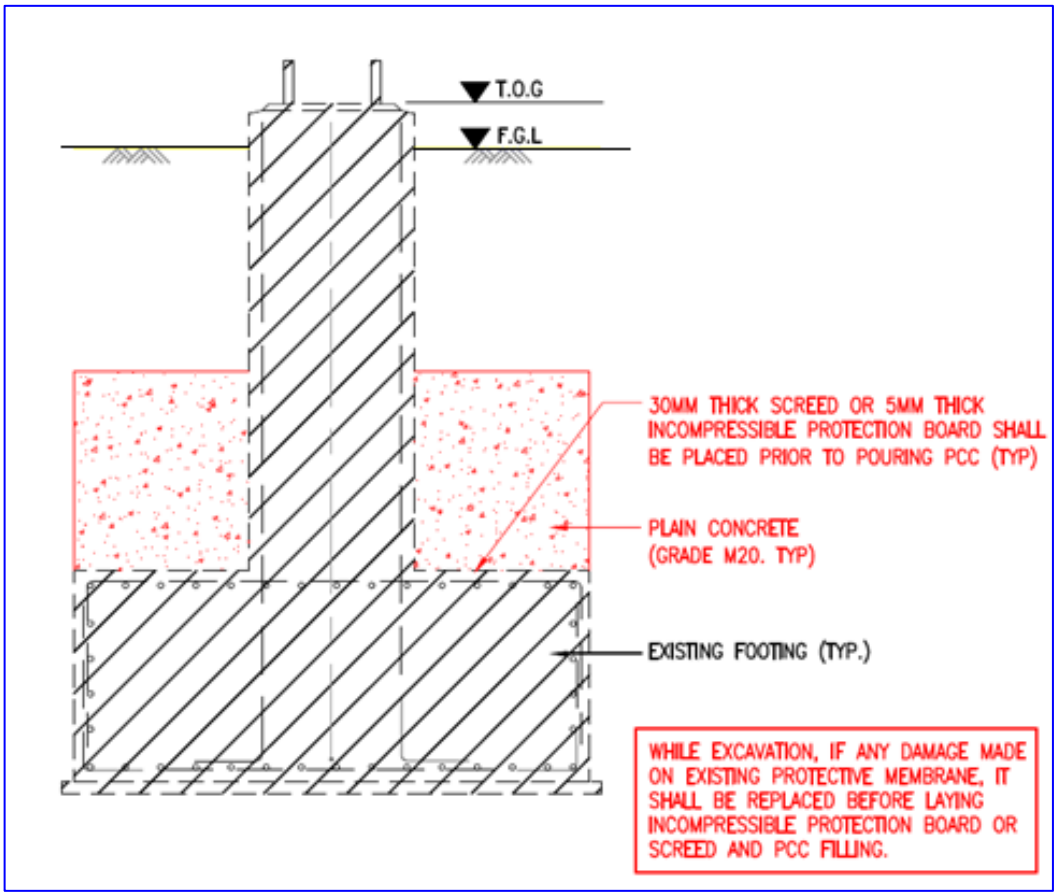

LEAN CONCRETE FILLING

All parties consent to this document being signed electronically -PT&CS/GP/INT/2021/18407